Z1188-150

LARGE CAPACITY OIL INTERCEPTOR
WITH ANCHOR FLANGE

SPECIFICATION SHEET

TAG _____

Dimensional Data (inches and [mm]) are Subject to Manufacturing Tolerances and Change Without Notice

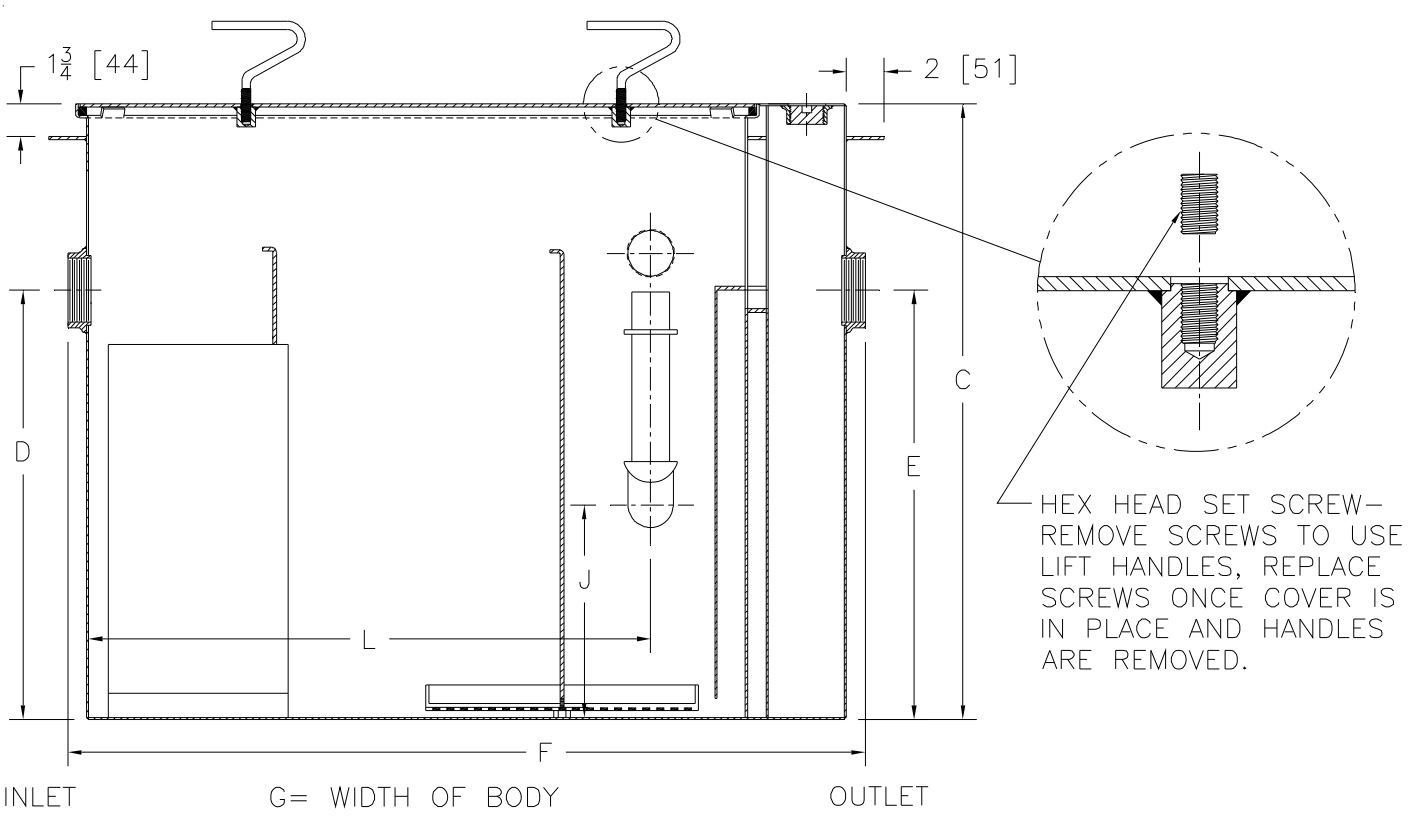

Flow Rate GPM[L]Min	Inlet/Outlet Size	Water Capacity Gal. [L]	App. Wt. Lbs. [Kg]	No. of Covers	Dimensions In Inches					
					C	D/E	F	G	J	L
100 [379]	3 [75]	110 [306]	432 [196]	1	33 [838]	23 [584]	42 3/4 [1086]	33 5/8 [854]	11 3/8 [289]	30 1/8 [765]

ENGINEERING SPECIFICATION: ZURN Z1188-150
Large capacity Acid Resistant Coated interior and exterior fabricated steel oil interceptor, with bronze cleanout plug and visible double wall trap seal, anchor flange, removable combination pressure equalizing/flow diffusing baffle, 6 [152] extension and sediment bucket, horizontal baffle, adjustable oil draw-off and vent connections either side. Complete with secured, gasketed, non-skid cover with removable lift handles and flow control fitting. Regularly furnished with inlet and outlet in high position.

OPTIONS (Check/specify appropriate options)

PREFIXES

____ **Z** Acid Resistant Coated Fabricated Steel*

SUFFIXES

____ **-E** Acid Resistant Coated interior and exterior fabricated steel extension section. (Specify 'C' Dim. required) for recessed installation.

____ **-HD** Heavy-duty traffic cover rated at 10,000 lbs [4536 Kg.] maximum safe live load.

*REGULARLY FURNISHED UNLESS OTHERWISE SPECIFIED

REV.	DATE: 12/04/07	C.N. NO. 97784
DWG. NO. P-15493	PRODUCT NO. Z1188-150	

ZURN INDUSTRIES, LLC. ♦ SPECIFICATION DRAINAGE OPERATION ♦ 1801 Pittsburgh Ave. ♦ Erie, PA 16514
Phone: 814\455-0921 ♦ Fax: 814\454-7929 ♦ World Wide Web: www.zurn.com
In Canada: ZURN INDUSTRIES LIMITED ♦ 3544 Nashua Drive ♦ Mississauga, Ontario L4V1L2 ♦ Phone: 905\405-8272 Fax: 905\405-1292