Z1202-1N4-XH

EXTRA-HEAVY-DUTY- 750 lbs [340kg]
EZCARRY® ADJUSTABLE VERTICAL HIGH PERFORMANCE SIPHON JET NO-HUB WATER CLOSET CARRIER SYSTEM WITH SIDE INLET

SPECIFICATION SHEET

TAG _____

Design and Dimensional Data (inches and [mm]) are Subject to Manufacturing Tolerances and Change Without Notice

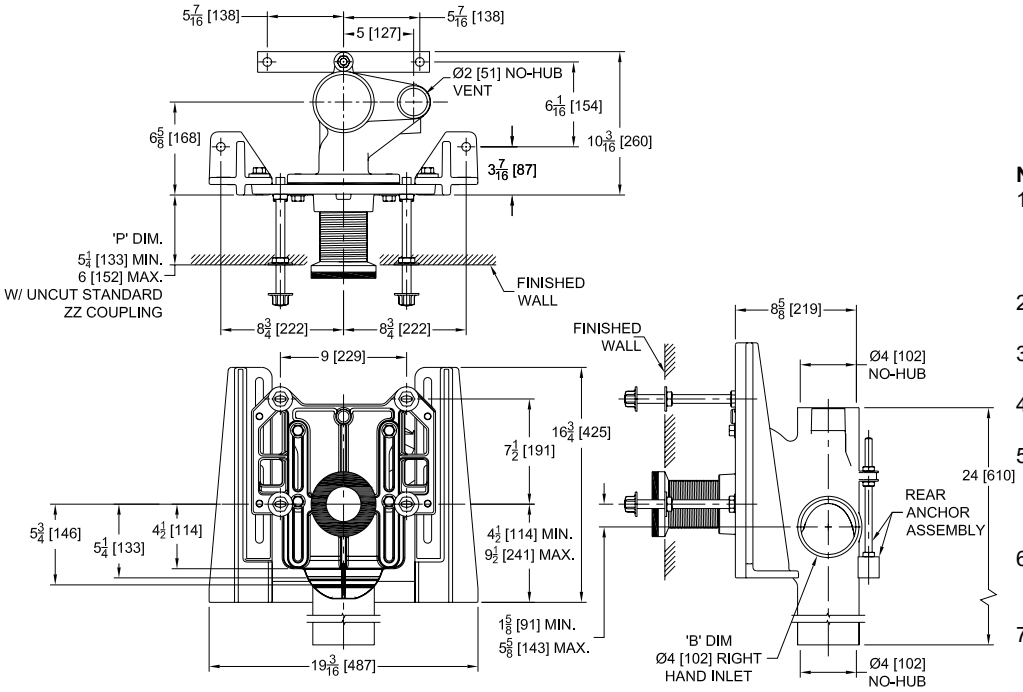

Product Number	Approx. Wt. lbs [kg]
Z1202-1NL4-XH	102 [46]
Z1202-1NR4-XH	

Note:

1. Cut ZZ Coupling, Min. 'P' Dim. Obtainable = 2 [51]. Cut EZ-Set™ Coupling, Min. 'P' Dim. Obtainable = 4-1/4 [108] or 2-1/16 [52] for 12 [305] NPT
2. Feet bolted to floor using 1/2 [13] dia. anchors.
3. Rear anchor foot assembly required for secure installation.
4. Floor anchors must each be able to withstand a pull-out force of 820 lbs [372 kg].
5. Pull-out forces are calculated values with standard coupling assembly. No safety factor has been applied. See Form C38 for more information.
6. 2 [51] No-Hub vent connection regularly furnished on right hand side. Left hand available when specified (Suffix -VL)
7. Auxiliary inlet available right (-JR) or left (-JL) or both sides (-JJ) when specified.

Z1202-1NR4-XH Illustrated

ENGINEERING SPECIFICATION: ZURN Z1202-1N4-XH
EZCarry® Extra-Heavy-Duty vertical siphon jet water closet carrier system, with high performance Dura-Coated cast iron main fitting with hydro-mechanically optimized sweep, 4" [102 mm] no-hub connections, extended 2" [51mm] vent, and 4" [102 mm] side inlet. Corrosion resistant, adjustable 3" [76 mm] dia. X 6" [152 mm] coupling with integral test cap, designed to increase flow velocity and line carry, and labor saving "Neo-Seal" bonded gasket optimizes flow performance while reducing installation steps. Complete system includes adjustable faceplate, QuickFit™ faceplate gasket, floor mounted foot supports; extra-heavy-duty ½" [13 mm] rear anchor tie down; fixture bolts, trim, and stud protectors. EZCarry® XH system complies with all applicable requirements of ASME A112.6.1M up to a 750 lbs [340 kg] maximum static load.

OPTIONS (Check/specify appropriate options)

_____ Z1202-1NL4-XH 4 [102] No-Hub Stack, Single Inlet, 4 [102] Left Hand Side Inlet, 2 [51] Left Hand Vent
_____ Z1202-1NR4-XH 4 [102] No-Hub Stack, Single Inlet, 4 [102] Right Hand Side Inlet, 2 [51] Right Hand Vent

PREFIXES

_____ Z D.C.C.I. System with Zurn ZZ Adjustable Coupling*
_____ ZQ D.C.C.I. System with NPT Faceplate, Non-Adjustable Coupling

SUFFIXES

_____ -CC Corrosion Resistant Cast Iron Coupling (2-1/4 [57] to 12 [305])
_____ -CE EZ-Set™ Coupling (NPSM 6 [152], 12 [305] or custom) (NPT 12 [305] or custom)
_____ -CL Custom Length Standard Coupling with Integral Test Cap (Specify Length 4, 8, 10, 12 [102, 203, 254, 305])
_____ -CS 2-1/4 [57] Polymer Coupling with Integral Test Cap (ZZ Coupling Only)
_____ -G Galvanized Cast Iron
_____ -JJ Two 2 [51] Auxiliary Inlets
_____ -JL 2 [51] Left-Hand Auxiliary Inlet
_____ -JR 2 [51] Right-Hand Auxiliary Inlet
_____ -VL Left Hand Vent Connection
_____ -VP Vandal-Proof Trim
_____ -45 Finishing Frame for Siphon Jet Water System
_____ -50 Flush Valve Supply Support for Water Closets

* Regularly furnished unless otherwise specified.

⚠ **WARNING:** Cancer and Reproductive Harm - www.P65Warnings.ca.gov
⚠ **ADVERTENCIA:** Cáncer y daño reproductivo - www.P65Warnings.ca.gov
⚠ **AVERTISSEMENT:** Cancer et effets néfastes sur la reproduction - www.P65Warnings.ca.gov

Zurn Industries, LLC | Specification Drainage Operation
1801 Pittsburgh Avenue, Erie, PA 16502, Ph. 855.663.9876

In Canada | Zurn Industries Limited
7900 Goreway Drive, Unit 10, Brampton, Ontario L6T 5W6, Ph. 877.892.5216

www.zurn.com

Rev. A
Date: 07/25/24
C.N. No. 146181
Patent zurn.com/patents
Prod. | Dwg. No. Z1202-1N4-XH