# ZN1201-N_3

NARROW WALL WITH 7-7/16 [189] FRONT TO BACK
EZCARRY® ADJUSTABLE HORIZONTAL HIGH PERFORMANCE
SIPHON JET NO-HUB WATER CLOSET CARRIER SYSTEM

**SPECIFICATION SHEET**

TAG _____

**PATENT PENDING**

Dimensional Data (inches and [mm]) are Subject to Manufacturing Tolerances and Change Without Notice

**ZN1201-NR3 Illustrated**

| Product Number | Approx. Wt. lbs [kg] |
|---|---|
| ZN1201-NL3 | 75 [34] |
| ZN1201-NR3 | |

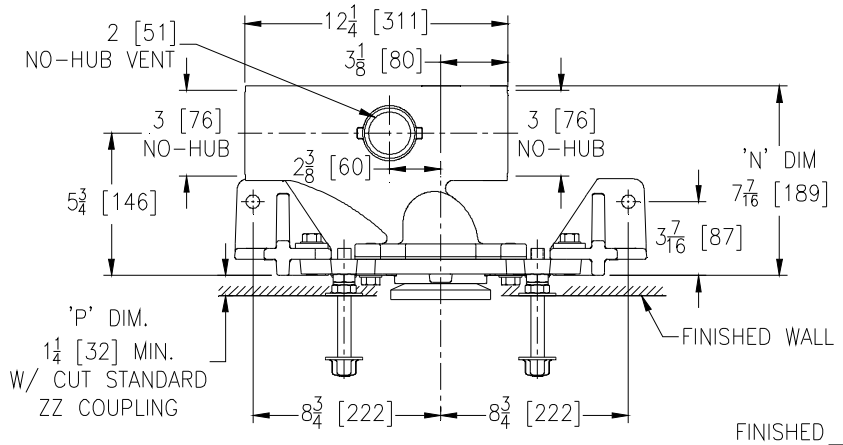


Note:
1. Cut ZZ Coupling, Min 'P' Dim. Obtainable = 1-1/4 [322]
   Cut ZQ CE Coupling, Min. 'P' Dim. Obtainable = 1-9/16 [40]
2. Carrier floor anchors must each be able to withstand a pull-out force of 1741 lbs [790 kg].
3. Pull-out forces are calculated values with standard coupling assembly. No safety factor has been applied. See Form # C38 for more information.

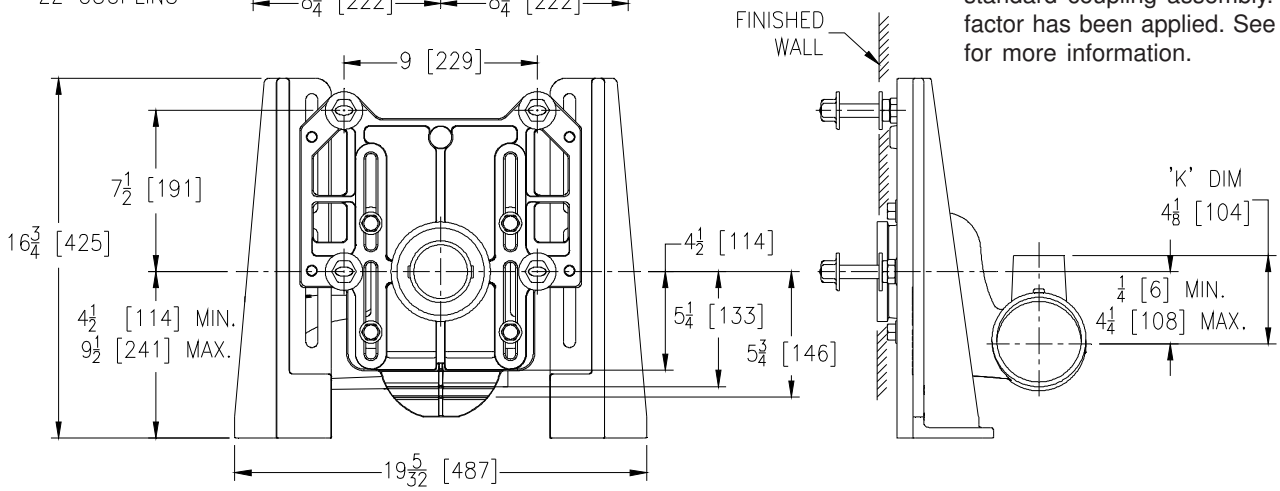


**ENGINEERING SPECIFICATION:** ZURN ZN1201-N_3
EZCarry® Narrow Wall horizontal siphon jet water closet carrier system, with high performance Dura-Coated cast iron main fitting with hydro-mechanically optimized sweep, 3" [76mm] no-hub connections, and extended 2" [51 mm] vent. Corrosion resistant, adjustable 3" [76 mm] dia. X 6" [152 mm] coupling with integral test cap, designed to increase flow velocity and line carry, and labor saving "Neo-Seal" bonded gasket optimizes flow performance while reducing installation steps. Complete system includes an adjustable, gasketed faceplate; floor mounted foot supports; fixture bolts, trim, and stud protectors. EZCarry narrow wall system complies with all applicable requirements of ASME A112.6.1M up to a 500 lbs [227 kg] maximum static load.

**OPTIONS** (Check/specify appropriate options)
- ____ ZN1201-NL3 3 [76] No-Hub Left Hand Inlet with Flow to Right
- ____ ZN1201-NR3 3 [76] No-Hub Right Hand Inlet with Flow to Left

**PREFIXES**
- ____ ZN D.C.C.I. System with Zurn ZZ Adjustable Coupling*
- ____ ZNQ D.C.C.I. System with NPT Faceplate, Non-Adjustable Coupling

**SUFFIXES**
- ____ -CC Corrosion Resistant Cast Iron Coupling (2-1/4 to 12 [57 to 305])
- ____ -CS 2-1/4 [57] Polymer Coupling with Integral Test Cap
- ____ -G Galvanized Cast Iron
- ____ -JC 2 [51] Auxiliary Inlet with 1/8 [3] Blend
- ____ -VP Vandal-Proof Trim
- ____ -50 Flush Valve Supply Support for Water Closets

* Regularly furnished unless otherwise specified.


**Zurn Industries, LLC | Specification Drainage Operation**
1801 Pittsburgh Avenue, Erie, PA U.S.A. 16502 · Ph. 855-663-9876, Fax 814-454-7929
In Canada | **Zurn Industries Limited**
3544 Nashua Drive, Mississauga, Ontario L4V 1L2 · Ph. 905-405-8272, Fax 905-405-1292
**www.zurn.com**



Rev. A
Date: 06/19/2019
C.N. No. 141327
Prod. | Dwg. No. ZN1201-N_3