SPECIFICATION SHEET

ZE1203-N-104

ADJUSTABLE HORIZONTAL SIPHON JET NO-HUB W/ 2 [51] NO-HUB AUXILIARY INLET

TAG _____

Dimensional Data (inches and [mm]) are Subject to Manufacturing Tolerances and Change Without Notice

Product Number	Approx. Wt. Lbs. [kg]
ZE1203-NL-104	84[38]
ZE1203-NR-104	84[38]

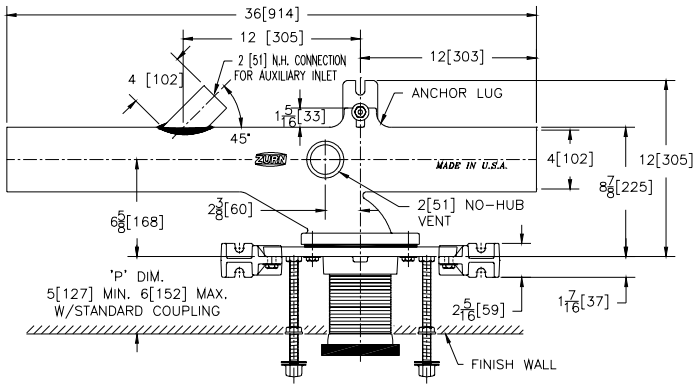

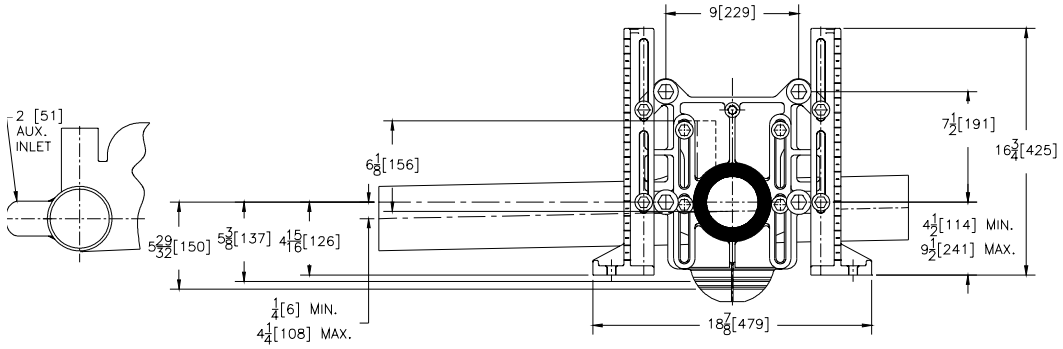

ENGINEERING SPECIFICATION: ZURN ZE1203-104( ) Adjustable, horizontal siphon jet water closet "Rigid System" with 4 [102] No-Hub connections. Complete with Dura-Coated cast iron right hand or left hand main fitting, with 2 [51] vent, adjustable gasketed face plate, universal floor mounted foot supports, corrosion resistant adjustable ABS coupling with integral test cap, 2 [51] auxiliary inlet, fixture bolts, trim, and stud protectors. Rear anchor tie down and bonded "Neo-Seal" gasket.

OPTIONS (Check/specify appropriate options)

ZE1203-NR4-104 4 [102] No-Hub Right Hand Inlet with Flow to Left w/ 2 [51] aux. inlet
ZE1203-NL4-104 4 [102] No-Hub Left Hand Inlet with Flow to Right w/ 2 [51] aux. inlet

Note:

1. Min. 'P' Dim. Obtainable=2 [51]
2. Feet bolted to floor using min. 1/2 [13] dia. bolts and back slots on carrier feet.
3. Back anchor foot required for secure installation.

PREFIXES

_____ ZQ D.C.C.I. System with NPT Faceplate, Non-Adjustable Coupling

SUFFIXES

_____ -A Auxiliary Support Assembly (For 'P" Dim. Greater than 18 [457])
_____ -B Blowout Type Fixture Support
_____ -BC Back Cleanout
_____ -CC Corrosion Resistant Cast Iron Coupling (6 [152] to 12 [305])
_____ -CL Coupling Length Greater Than 12 [305] (Specify Length Required)
_____ -F Floor Mount, Back Outlet Fixture Support
_____ -G Galvanized Cast Iron
_____ -M Auxiliary Foot Support (For 'P' Dim. 10 [254] - 18 [457])
_____ -VP Vandal Proof Trim
_____ -W Adapter for Womens Urinal
_____ -XH Extra-Heavy-Duty 500-Lb. Carrier
_____ -X3 3" [76] Foot Extension Assembly
_____ -X4 4" [102] Foot Extension Assembly
_____ -29 Mechanical Test Cap Assembly
_____ -45 Finishing Frame for Siphon Jet System (For Blowout System specify -45-B)
_____ -50 Flush Valve Supply Support for W.C.
_____ -61 "ZZ" Coupling Wrench

*REGULARLY FURNISHED UNLESS OTHERWISE SPECIFIED

REV.	DATE: 10/05/04	C.N. NO. 92631
DWG. NO. P-15088	PRODUCT NO. ZE1203-104	

ZURN INDUSTRIES, INC. ♦ SPECIFICATION DRAINAGE OPERATION ♦ 1801 Pittsburgh Ave. ♦ Erie, PA 16514
Phone: 814/455-0921 ♦ Fax: 814/454-7929 ♦ World Wide Web: www.zurn.com
In Canada: ZURN INDUSTRIES LIMITED ♦ 3544 Nashua Drive ♦ Mississauga, Ontario L4V1L2 ♦ Phone: 905/405-8272 Fax: 905/405-1292