Z127-77

8 1/2 [216] DIAMETER DECK RECEPTOR DRAIN W/ TOP-SET® DECK PLATE

SPECIFICATION SHEET

TAG _____

Dimensional Data (inches and [mm]) are Subject to Manufacturing Tolerances and Change Without Notice

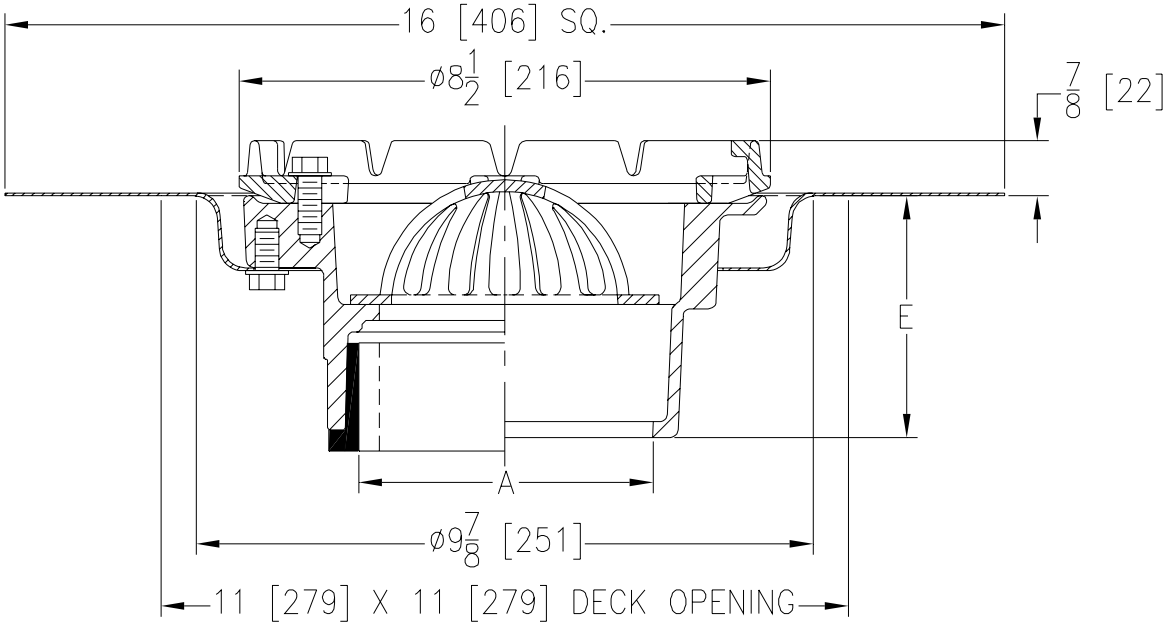

A Pipe Size In.	Approx. Wt. Lbs. [kg]
2-3-4 [51-76-102]	19 [9]

ENGINEERING SPECIFICATION: ZURN Z127-77
8 1/2 [216] Diameter deck receptor drain, Dura-Coated cast iron body with combination membrane flashing clamp/gravel guard, top-set® deck plate and internal dome strainer.

OPTIONS (Check/specify appropriate options)

PIPE SIZE	(Specify size/type) OUTLET		E BODY HT. DIM.
2-3-4 [51-76-102]	____ IC	Inside Caulk	3 7/8 [98]
2-3-4 [51-76-102]	____ IP	Threaded	2 5/8 [67]
2-3-4 [51-76-102]	____ NH	No-Hub	3 7/8 [98]
2-3-4 [51-76-102]	____ NL	Neo-Loc	3 3/4 [95]

PREFIXES

_____ Z D.C.C.I. Body with Collar*

SUFFIXES

_____ -AR Acid Resistant Epoxy Coated
_____ -E 2 [51] High Static Extension (Specify Ht.)
_____ -G Galvanized Cast Iron
_____ -TC Neo-Loc Test Cap Gasket (2 [51] - 4 [102] NL Bottom Outlet Only)

*REGULARLY FURNISHED UNLESS OTHERWISE SPECIFIED

REV. DATE: 2/20/08 C.N. NO. 98134

DWG. NO. P-15520 PRODUCT NO. Z127-77

ZURN INDUSTRIES, LLC ♦ SPECIFICATION DRAINAGE OPERATION ♦ 1801 Pittsburgh Ave. ♦ Erie, PA 16514
Phone: 814/455-0921 ♦ Fax: 814/454-7929 ♦ World Wide Web: www.zurn.com
In Canada: ZURN INDUSTRIES LIMITED ♦ 3544 Nashua Drive ♦ Mississauga, Ontario L4V1L2 ♦ Phone: 905/405-8272 Fax: 905/405-1292